robot coupe® U.S.A., Inc.

R300C Series C

Series C Machines # 258xxxxx03

1- Speed, 120 Volt, 1 Phase, 60Hz., 1/2 HP.
1725 RPM, 9 Amps

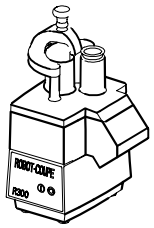

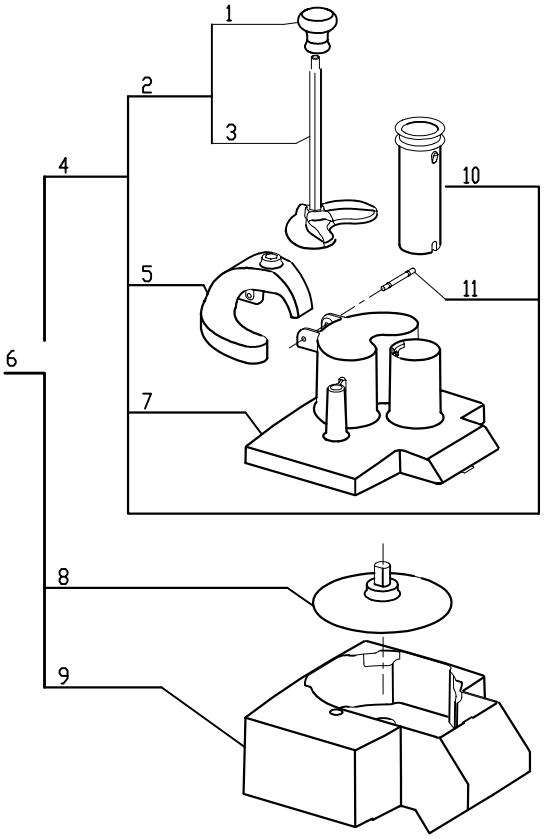

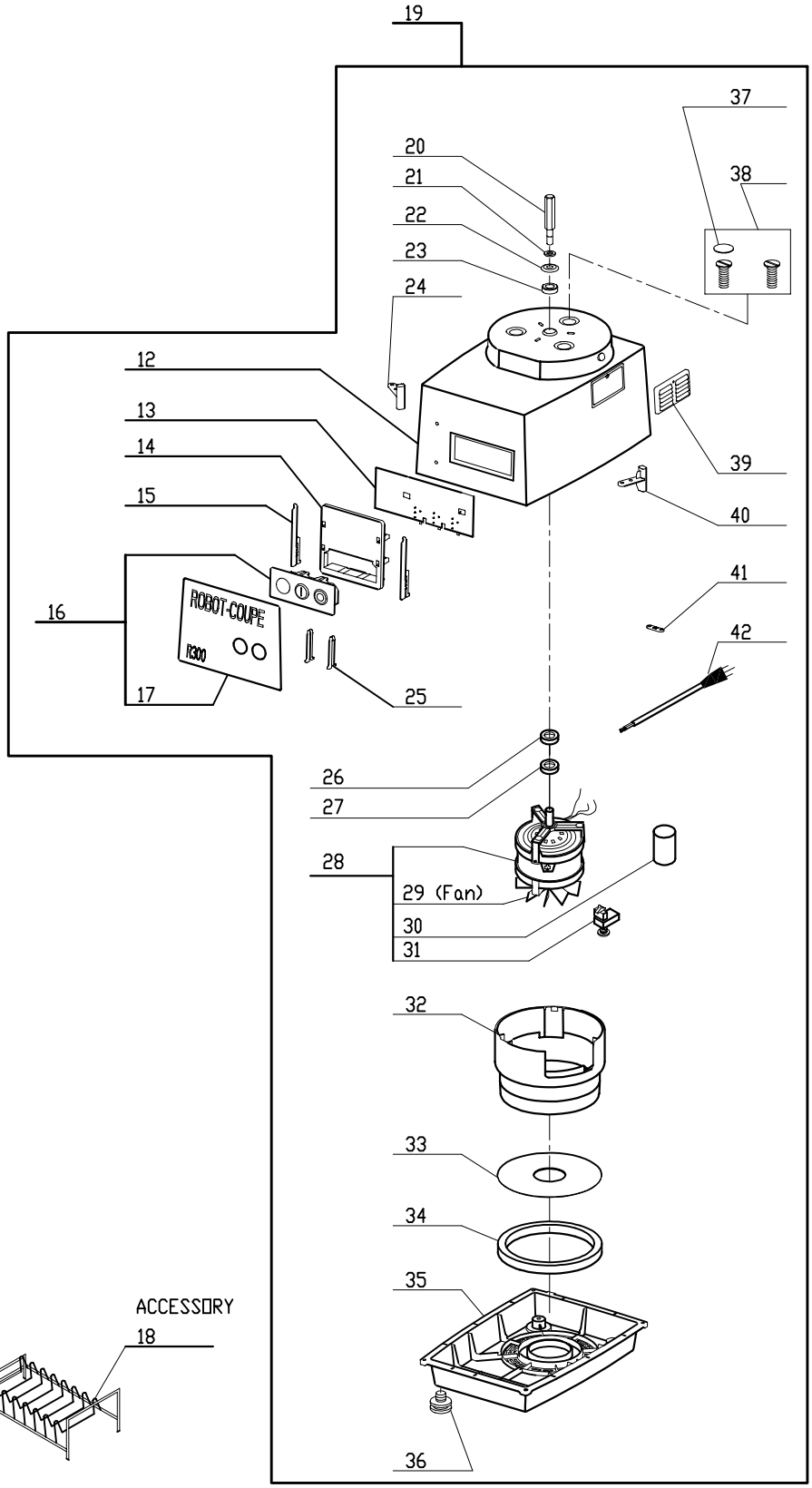

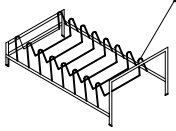

WRK 1/20/03 9:23 AM US R300C Series C SN-258xxxxx03.dwg