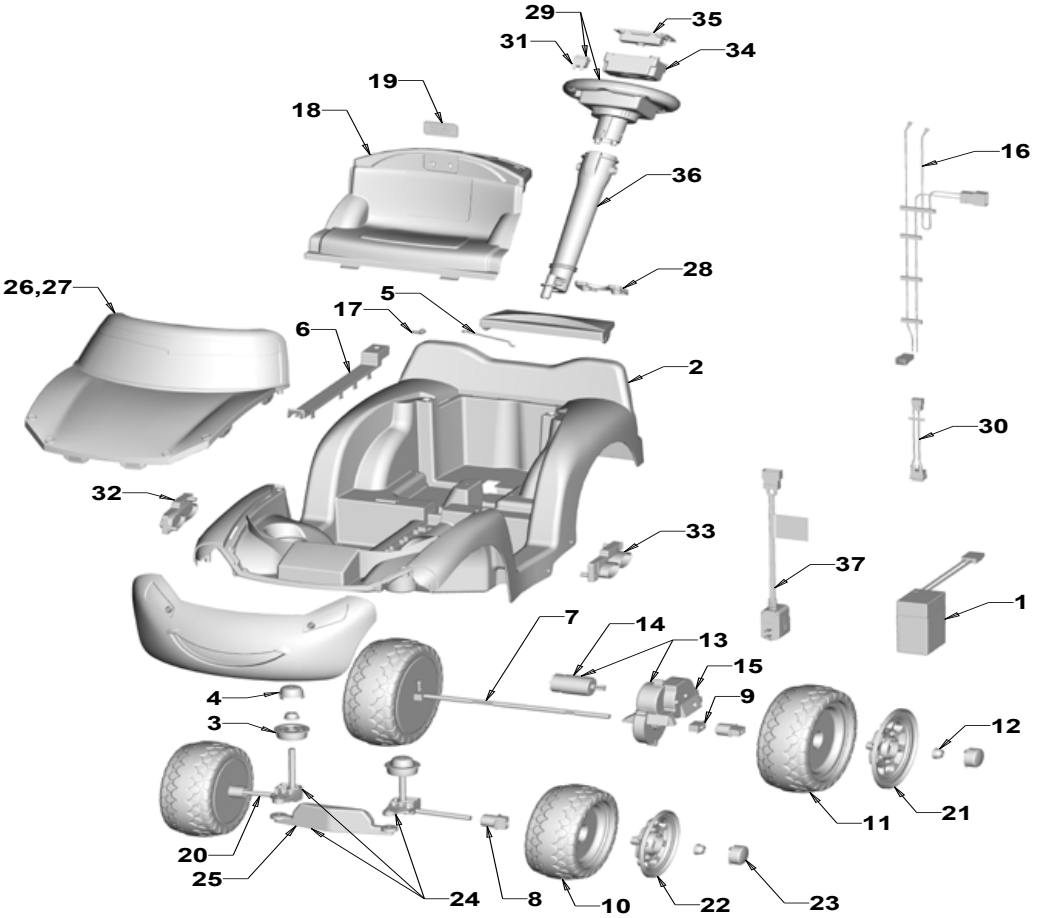

Y8640
LiL Lightning McQueen
PW Toddler

Age Range:	12-36 Months
Weight Limit:	40 Lbs.
Surfaces:	Grass and Hard Surfaces
Speed:	2 MPH Forward
Colors:	Red Body\Black Wheels
Intro:	2012
Suggested Retail:	$115.77
Box Dimensions:	35.5" x 14.375" x 16.875"
Warranty:	One Year Vehicle
	Six Months Battery

POWER WHEELS by Fisher-Price®

Item	Part #	Description	QTY
1	00801-1457	4 Amp Internal Fuse Battery	1
2	N\A	Body	
3	M1350-2259	Axle Bushing	2
4	M1350-2249	Capnut Cover	2
5	74230-4129	Battery Retainer	1
6	T3639-2529	Channel Cover	1
7	T3639-4509	Rear Axle	1
8	M1350-2179	Wheel Bushing	4
9	3800-8629	Rectangular Bushing (no ext.)	2
10	T3639-2169	Front Wheel	2
11	T3639-2179	Rear Wheel	2
12	00801-1421	.354 Black Retainer/Cap Nut. (subs)	6
13	**00968-3900**	**#10 Motor Gearbox Assm.**	**1**
14	**00968-3700**	**# 10 Motor Pinion Assm.**	**1**
15	**00968-3800**	**#10 Gearbox Assm.**	**1**
16	**T3639-9799**	**Main Wiring Harness**	**1**
17	00801-1450	Cable Clamp	1
18	T3639-6119	Seat	1
19	00801-1503	PW Emblem	1
20	M1350-4519	Front Axle	2
21	T3639-2149	Wheel Cover Rear	2
22	T3639-2159	Wheel Cover Front	2
23	T3639-2509	Center Wheel Cover	4
24	T3639-9189	Steering Linkage Assm.	1
25	N\A	Steering Rod	
26	T3639-9409	Windshield Assm.	1
27	* SEE 26		
28	T3639-2459	Steering column Retainer	1

Item	Part #	Description	QTY
29	T3639-9709	Steering Wheel w/Harness for Lil	1
30	T3639-9789	Steering Wheel Harness	1
31	00801-0697	Switch Signalux - 2 Prong	1
32	T3639-2309	Right Exhaust	1
33	T3639-2319	Left Exhaust	1
34	T3639-9759	Soundbox	1
35	T3639-2729	Steering Wheel Cover	1
36	M1350-2269	Steering Column	1
37	00801-1483	Charger 4amp fused - 6volt (subs)	1

Parts Not Shown

Part #	Description	QTY
T3639-0310	Label Sheet	1
T3639-0920	Manual	1
T3639-9089	Hardware Bag	1
T3639-2139	Front Bumper	1
00912-8001	# 8 x 3/4" Screw	2

Bold and underlined parts are to be purchased and installed by Service Centers only. These items may not be sold directly to consumers by Service Centers or Fisher-Price.

2/28/2012 15:57