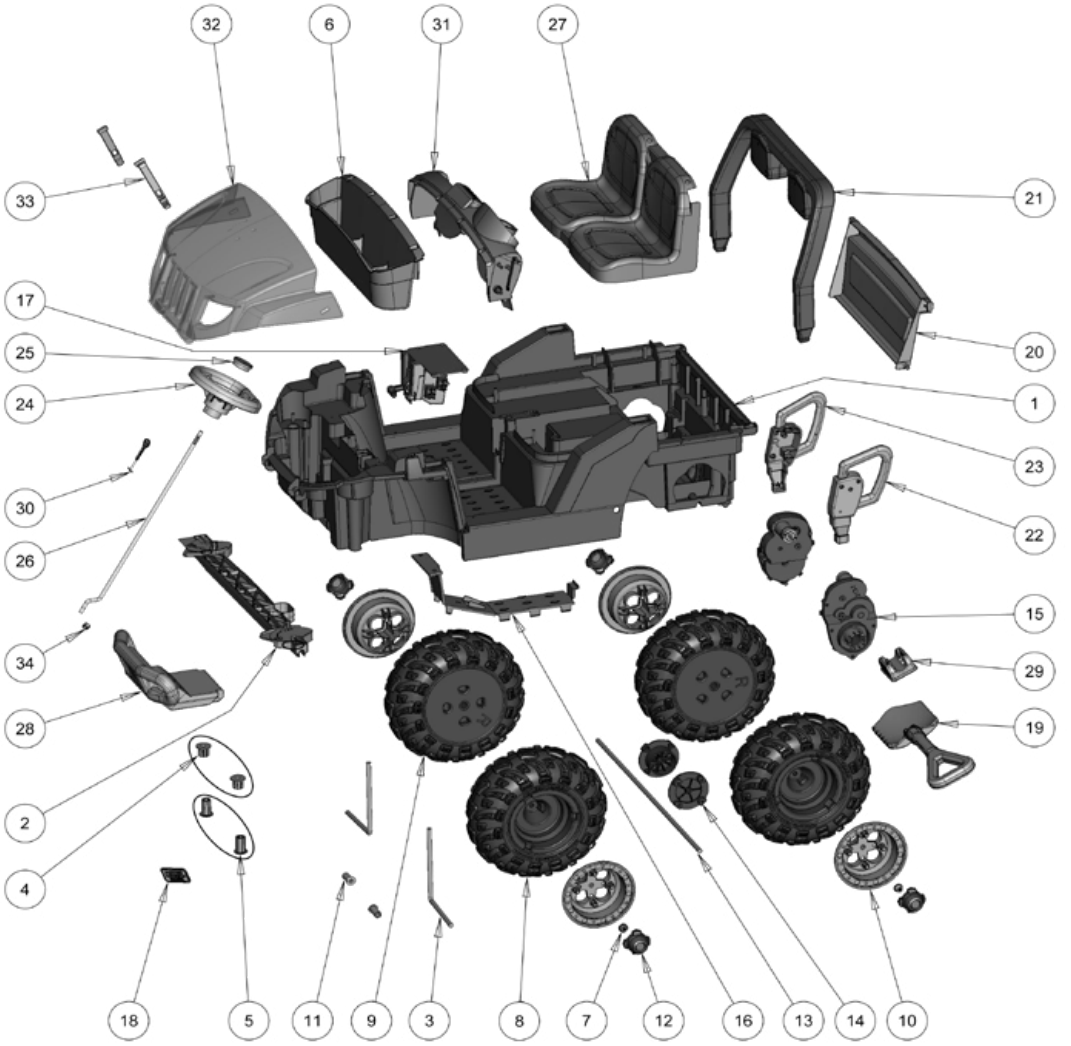

Y6534
Arctic Cat
PW Advanced Series

Age Range:	3 and up
Weight Limit:	130 lbs.
Surfaces:	Hard and grass surfaces
Speed:	2.5 / 5 mph Forward
	2.5 mph Reverse
Colors:	Green Body/Black Wheels
Intro:	2013
Suggested Retail:	$349.99
Box Dimensions:	23.374"x32.374x50.433
Warranty:	One Year Vehicle
	Six Months Battery

POWER WHEELS by Fisher-Price®

Item	Part #	Description	QTY
1	N/A	Body	
2	L2170-9199	Steering Linkage for Arctic Cat Prowler	1
3	L2170-4509	Front Axle for Arctic Cat Prowler	2
4	L2170-2689	Bushing - Upper for Arctic Cat Prowler	2
5	L2170-2699	Bushing - Lower for Arctic Cat Prowler	2
6	L2170-2269	Storage Tray for Arctic Cat Prowler	1
7	00801-1939	Cap Nut .437 - Black	6
8	J8472-2339	Left Wheel	2
9	J8472-2269	Right Wheel	2
10	W8675-6459	Hubcap for Arctic Cat	4
11	J8472-2379	Wheel Bushing for Rear Wheel	2
12	L2170-2469	Center Hubcap for Arctic Cat Prowler	4
13	L2170-4519	Rear Axle for Arctic Cat Prowler	1
14	L2170-2249	Driver for Arctic Cat Prowler	2
15	**00968-2922**	**# 7R Motor Gearbox**	**2**
16	L2170-9399	Footboard for Arctic Cat Prowler	1
17	74310-9239	Shifter Assm. - silver	1
18	00801-1518	Large Power Wheel Emblem	1
19	W8675-2449	Shovel	1
20	P8814-2319	Tailgate for Arctic Cat	1
21	L2170-2329	Rear Rollbar for Arctic Cat Prowler	1
22	W8675-2609	Left Handle	1
23	W8675-2619	Right Handle	1
24	3900-2153	Steering Wheel w/ Button	1
25	W9418-2729	Steering Wheel Button	1
26	L2170-4239	Steering Column for Arctic Cat Prowler	1
27	L2170-2409	Seat for Arctic Cat Prowler	1
28	3800-8505	Brush Guard w/Power Wheels Logo	
29	W8675-6559	Shovel Bracket	1
30	H0440-9049	Key Housing Assembly	1
31	3800-8492	Dashboard w/label for Arctic Cat	1
32	L2170-9150	Hood w/headlights for Arctic Cat	1
33	L2170-2289	Hood Strap for Arctic Cat	2
34	00905-0116	3/8" -16 Lock Nut	1

Parts Not Shown

Part #	Description	QTY
00801-1778	12 Volt Charger w/Probe	1
00801-1869	12 Volt Battery (1)	1
00968-2720	**# 7R Motor Pinion**	**2**
00968-2823	**# 7R Gearbox**	**2**
X0073-9799	**Wiring Harness for Arctic Cat**	**1**
00801-1775	**Switch Control - (shifter)(rocker type)**	**2**
00801-2039	**Footswitch - (plunger type)**	**1**
Y6534-0310	Label for Arctic Cat	1
X0073-0721	Manual for Arctic Cat	1
0912-8001	(1) #8 x 3/4 inch screw.	20
L2170-9289	Hardware Bag	1

Bold and underlined parts are to be purchased and installed by Service Centers only. These items may not be sold directly to consumers by Service Centers or Fisher-Price.

6/2/2014 8:48