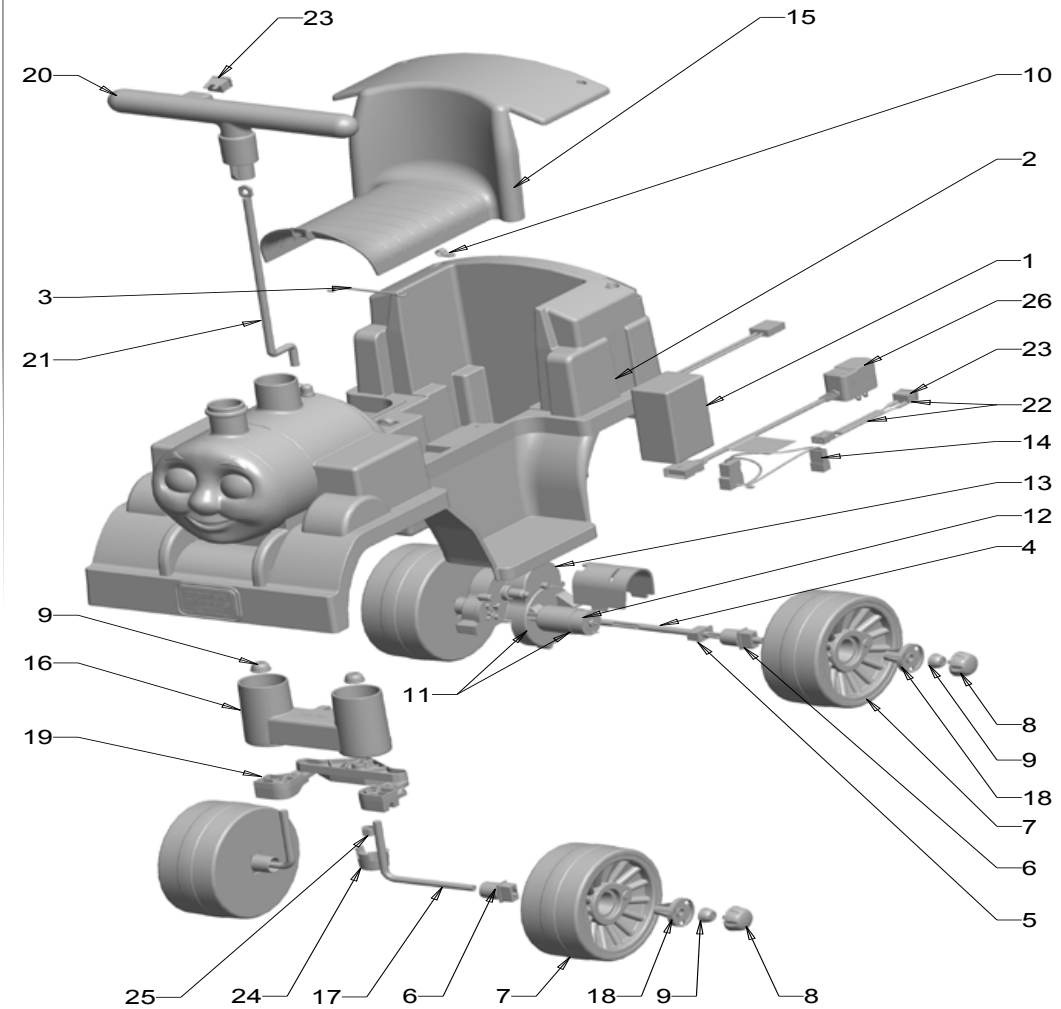

T4963 Thomas Toddler Toddler	
Age Range:	12-36 Months
Weight Limit:	
Surfaces:	Grass/Hard Surface
Speed:	2 mph
Colors:	Blue with Blue Wheels
Intro:	2010
Suggested Retail:	$89.99
Box Dimensions:	27.5" x 13.813" x 15.875"
Warranty:	One Year Vehicle
	Six Months Battery

POWER WHEELS by Fisher-Price®

Item	Part #	Description	QTY
1	00801-1457	4 Amp internal fuse battery	1
2	N\A	Chassis	
3	74230-4129	Battery Retainer	1
4	T4963-4529	Rear Axle	1
5	76920-2549	Rectangular Bushing (no ext.)	2
6	M1350-2179	Wheel Bushing	4
7	T4963-2119	Wheel	4
8	T4693-2349	Retainer Cover	4
9	0801-0548	.354 Palnut-white	6
10	00801-1450	Cable Clamp	1
11	**00968-3900**	**#10 Motor Gearbox Assm.**	**1**
12	**00968-3700**	**# 10 Motor Pinion Assm.**	**1**
13	**00968-3800**	**#10 Gearbox Assm.**	**1**
14	**T4963-9699**	**Wire Harness**	**1**
15	T4963-9149	Seat	1
16	N\A	Front Module	1
17	T4963-4519	Front Alxe	2
18	T4963-2129	Hub Cap Center	1
19	T4963-9329	Steering Linkage Assm.	1
20	T4963-9409	Handlebar Assembly w/Harness	1
21	T4963-4539	Steering Column	1
22	3800-7785	Handlebar harness w/switch	1
23	**00801-0697**	**Switch Signalux - 2 prong**	**1**
24	T4963-2359	Steering Column Cap	1
25	00905-0116	3/8" -16 Lock Nut	1
26	00801-1483	Charger 4amp fused - 6volt	1
27			
28			

Parts Not Shown

Part #	Description	QTY
00801-1518	Large Power Wheel Emblem	1
00801-1567	Wrench 9/16" (Assembly Tool)	1
T4963-9079	Parts Bag	1
T4963-0311	Labels	1
T4963-2219	Coal Box Cover for Thomas	1
T4963-0921	Manual for Thomas	1
T4963-9139	Front Wheel Assembly for Thomas	1
0801-0273	#8.18 x 1 screw	
0912-8001	#8x ¾ screw	

Bold and underlined parts are to be purchased and installed by Service Centers only. These items may not be sold directly to consumers by Service Centers or Fisher-Price.

3/1/2012 15:40